MIRAB CO.®

Manufacturer of Industrial Valves and Relevant Equipment

Tilting Disk Check Valves with Counter Weight

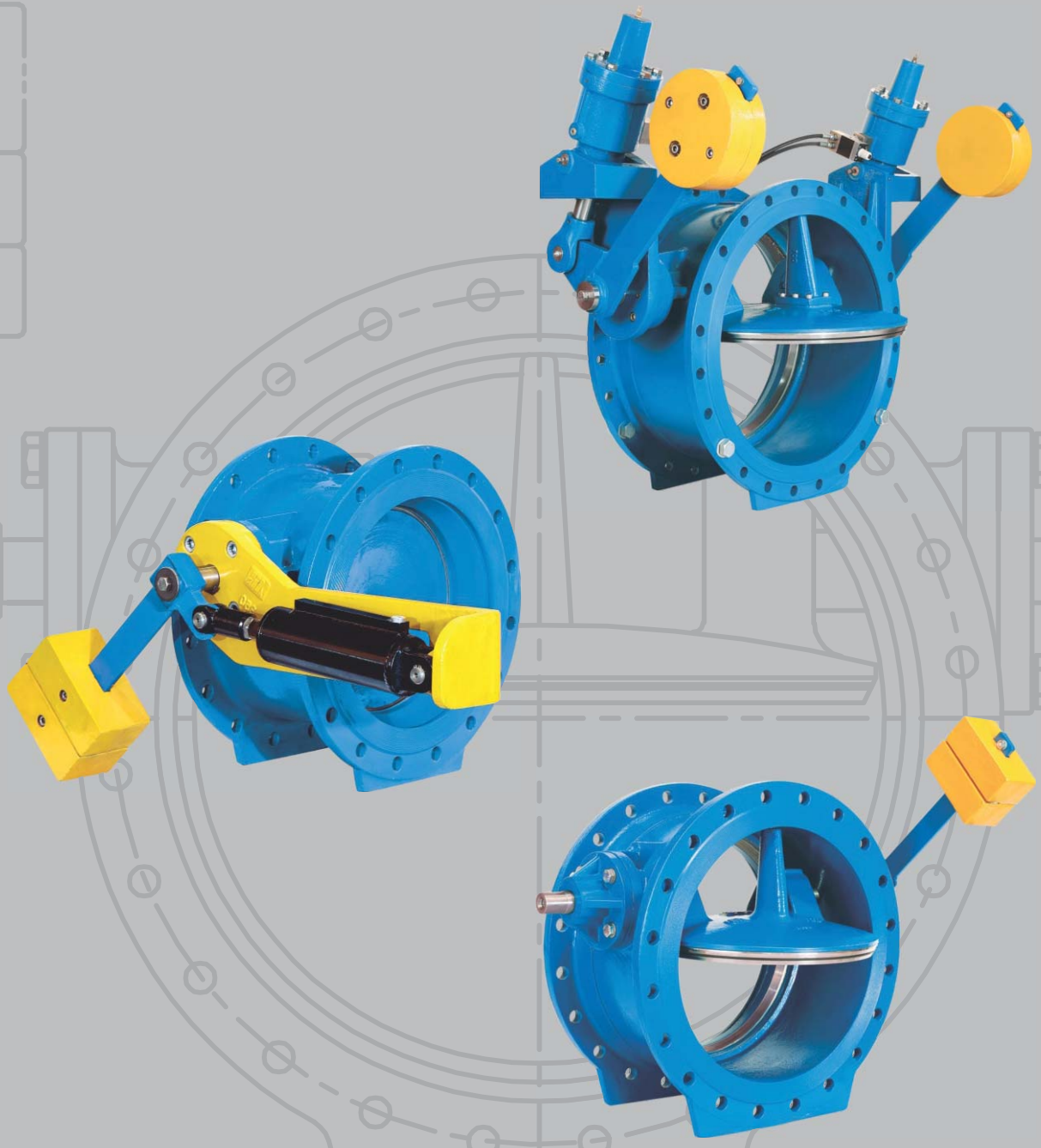

www.mirab-valves.com

Tilting-Disc Check Valves with Counter Weight

Size: DN 100 - 1800 mm
Pressure: PN 10- 40 bar
Face to face: DIN EN 558-1 series 14 (DIN3202-F4)
Flanges: DIN EN 1092-2 (DIN 2501)

Product features:
Eccentric disc operation, Body seat ring made of corrosion resistant steel, Disc seat ring is corrosion resistant steel with seal for reliable sealing, Possibility for installation of weight and lever on both sides. Low weight for short length of the valves , Maintenance free , Rugged body with disc suitable for fluid flow Disc and shaft are connected by key , Seat ring rolled into the body.

Product features:
This types of valve is used in water supply installations to stop the fluid flow in the opposite direction. The valve closing speed can be adjusted by changing the weight position along the lever. All of the seals of the valve bearing can easily be replaced. The standard seal material is NBR for up to 70°C (for gas up to100°C). For higher temperature and other fluids suitable seal material is available on request.

Corrosion protection:
Body and disc are fully coated with blue electrostatic powder coating with minimum 250 micron thickness.

Application:
Suitable for fluids such as water & waste water up to 70°C & gas up to 100°C.

Hydrostatic test Pressure (bar) according to DIN EN 12266-1		
Nominal Pressure PN (bar)	Test Pressure	
	Shell Test	Closure Test
10	17	11
16	25	18
25	38	28
40	60	44

Design:
- Possibility for installation of weight and lever on both sides.
- Disc seat ring is corrosion resistant with O-ring included.
- Rugged body with disc suitable for fluid flow.
- Bended stainless steel body seat ring.
- Disc & shaft connection by key.
- Low weight as short pattern.
- Eccentric disc operation.
- Maintenance free.
- Reliable design.

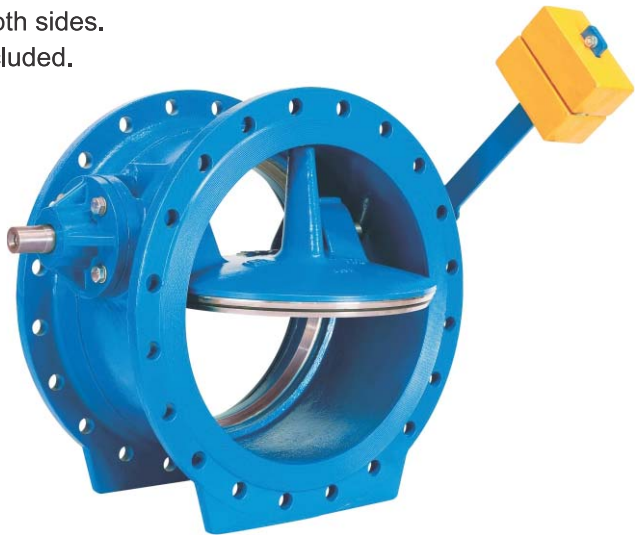

Part List

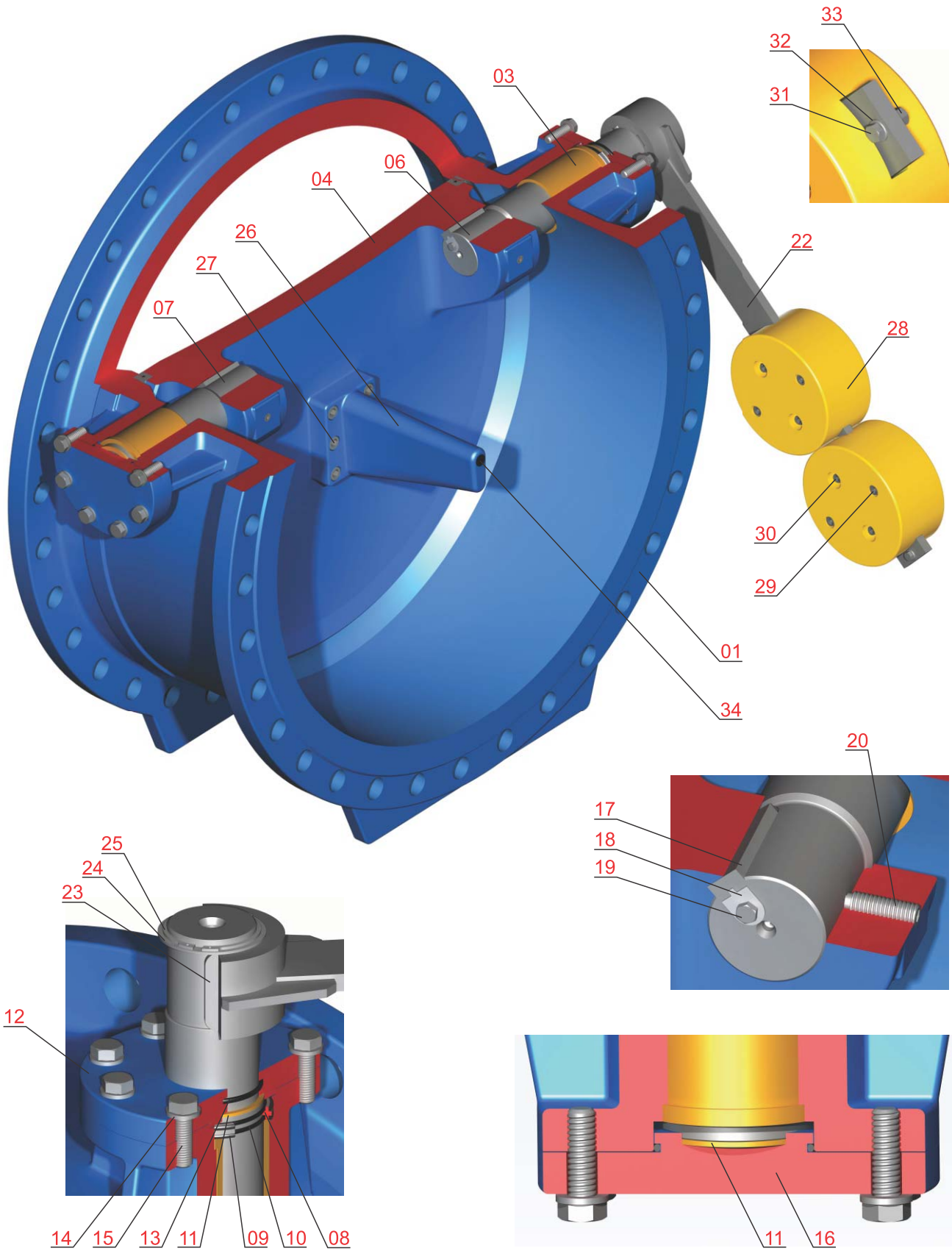
33
32
31
03
06
04
26
27
07
22
28
30
29
01
34
20
17
18
19
25
24
23
12
14
15
13
11
09
10
08
11
16

Body Seating Surface

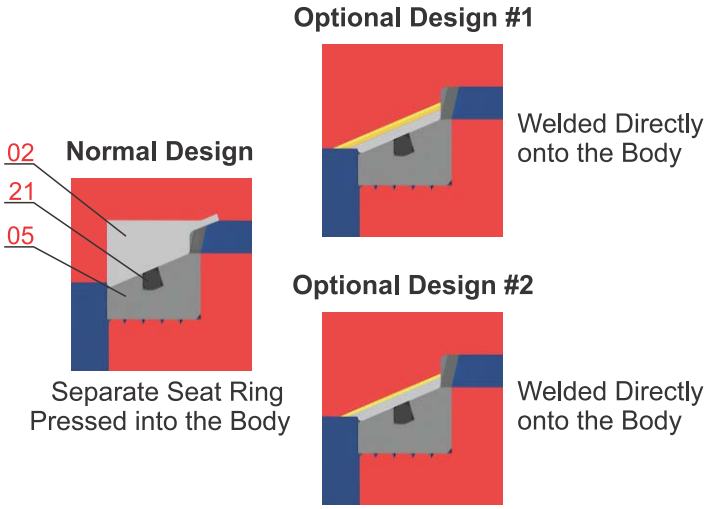

Part No.	Part Name	Part Material	1	2
01	Body	⁕EN 1563/ EN-GJS-400-15		
02	Body Seating Surface	18Cr- 8Ni		
03	Bearing Bush	ASTM B148 UNS 95200	●	
04	Disk	⁕EN 1563/ EN-GJS-400-15		
05	Disk Seat	DIN EN 10088-3/ 1.4301		
06	Shaft, Lever End	DIN EN 10088-3/ 1.4021	●	
07	Shaft, Free End	DIN EN 10088-3/ 1.4021	●	
08	Shaft Sealing	DIN EN 10088-3/ 1.4301	●	
09	O-ring	NBR (EPDM on Request)	●	●
10	O-ring	NBR (EPDM on Request)	●	●
11	Spacer Ring	BRASS		
12	Bearing Cover	⁕EN 1563/ EN-GJS-400-15		
13	O-ring	NBR (EPDM on Request)	●	●
14	Washer	DIN ISO 898-2, Property Class 8, Zinc Plated		
15	Hexagonal Bolt	DIN ISO 898-1, Property Class 8.8, Zinc Plated		
16	Cap	⁕EN 1563/ EN-GJS-400-15		
17	Internal Key	DIN EN 10088-3/ 1.4057	●	
18	Key Retainer	DIN EN 10088-3/ 1.4301	●	
19	Hexagonal Bolt	ISO 3506-1, Gr. A2, Property Class 70		
20	Counter Socket Screw	ISO 3506-1, Gr. A2, Property Class 70		
21	O-ring	NBR (EPDM on Request)	●	●
22	Lever	ST-37		
23	Key	High Strength Carbon Steel-St 60		
24	Spacer Ring	BRASS		
25	Cir clips	Steel (FST)	●	
26	Limit Stop	EN 1563/ EN-GJS-400-15		
27	Socket Screw	ISO 3506-1, Gr. A2, Property Class 70		
28	Counter weight	EN 1563/ EN-GJS-400-15		
29	Socket Screw	DIN ISO 898-1, Property Class 8.8, Zinc Plated		
30	Socket Screw	DIN ISO 898-1, Property Class 8.8, Zinc Plated		
31	Hexagonal Bolt	DIN ISO 898-1, Property Class 8.8, Zinc Plated		
32	Washer	ISO 898-2, Property Class 8, Zinc Plated		
33	Nut	ISO 898-2, Property Class 8, Zinc Plated		
34	rubber	EPDM / NBR	●	●

(1)Recommended spare parts
(2)Parts subjected to wear
⁕EN-GJS-500-7 available on request.

Dimensions & Weight of Tilting-Disc Check Valve

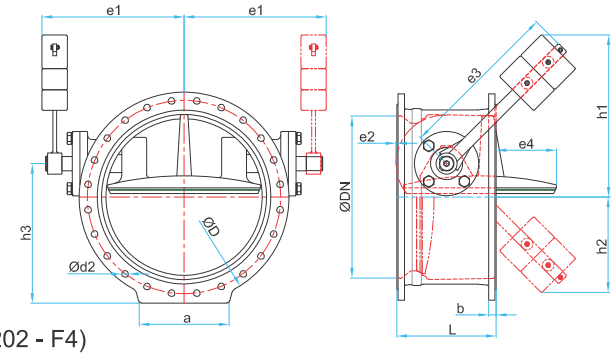

- DIN EN 1092 - 2 (DIN 2501)
- DIN EN 558 - 1 series 14 (DIN 3202 - F4)

	DN mm	L mm	ØD mm	b mm	ØK mm	Ød2 mm	n	e1 mm	e2 mm	e3 mm	e4 mm	h1 mm	h2 mm	h3 mm	a mm	Wgt. Kg
PN 10	100	190	220	19	180	19	8	166	-	150	-	135	89	136	100	17
	150	210	285	19	240	23	8	200	-	230	-	214	144	180	150	37
	200	230	340	20	295	23	8	244	-	230	19.4	226	140	217	160	52
	250	250	400	22	350	23	12	295	-	250	44	241	137	257	180	74
	300	270	455	24.5	400	23	12	343	-	300	69	301	175	298	200	105
	350	290	505	24.5	460	23	16	386	-	350	94	352	205	332	225	144
	400	310	565	24.5	515	28	16	425	-	400	115	394	234	368	250	155
	450	330	615	25.5	565	28	20	454	-	450	142	457	267	407	275	191
	500	350	670	26.5	620	28	20	490	-	500	165	500	293	444	300	226
	600	390	780	30	725	31	20	554	-	600	215	590	346	517	330	383
	700	430	895	32.5	840	31	24	616	2.5	700	261	695	405	598	390	525
	800	470	1015	35	950	34	24	714	13	800	312	763	427	681	450	722
	900	510	1115	37.5	1050	34	28	775	25	800	364	785	405	752	550	980
	1000	550	1230	40	1160	37	28	827	34	800	406	800	390	825	600	1180
	1200	630	1455	45	1380	41	32	959	37	1000	506	987	487	987	685	1746
	1400	710	1675	46	1590	44	36	1129	51.5	1200	605	1179	589	1142	800	2608
	1500	750	1785	47.5	1700	44	36	1269	66.5	1200	646	1205	593	1208	780	3082
	1600	790	1915	49	1820	50	40	1326	79	1200	695	1222	573	1297	820	3713
	1800	870	2115	52	2020	50	44	1470	111	1250	810	1304	564	1460	1000	4974
PN 16	100	190	220	19	180	19	8	166	-	150	-	135	89	136	100	17
	150	210	285	19	240	23	8	200	-	230	-	214	144	180	150	37
	200	230	340	20	295	23	12	244	-	230	19.4	226	140	217	160	52
	250	250	400	22	355	28	12	295	-	250	44	241	137	257	180	74
	300	270	455	24.5	410	28	12	343	-	300	69	301	175	298	200	120
	350	290	520	26.5	470	28	16	386	-	350	94	352	205	339	225	150
	400	310	580	28	525	31	16	425	-	400	115	394	234	375	250	167
	450	330	640	30	585	31	20	445	-	450	142	457	267	420	275	209
	500	350	715	31.5	650	34	20	490	-	500	165	500	293	466	300	246
	600	390	840	36	770	37	20	554	-	600	215	590	346	547	330	435
	700	430	910	39.5	840	37	24	616	2.5	700	261	695	405	605	390	555
	800	470	1025	43	950	41	24	714	13	800	312	763	427	686	450	758
	900	510	1125	46.5	1050	41	28	775	25	800	364	785	405	757	550	1026
	1000	550	1255	50	1170	44	28	827	34	800	406	800	390	837	600	1260
	1200	630	1485	57	1390	50	32	959	37	1000	506	987	487	1002	685	1870
	1400	710	1685	60	1590	50	36	1129	51.5	1200	605	1179	589	1147	800	2742
	1500	750	1820	62.5	1710	57	36	1269	66.5	1200	646	1205	593	1226	780	3288
	1600	790	1930	65	1820	57	40	1326	79	1200	695	1222	573	1300	820	3919
	1800	870	2130	70	2020	57	44	1470	111	1250	810	1304	564	1468	1000	5210
PN 25	100	190	235	19	190	23	8	166	-	150	-	135	89	144	100	18
	150	210	300	20	250	28	8	200	-	230	-	214	144	187	150	38
	200	230	360	22	310	28	12	244	-	230	19.4	226	140	227	160	56
	250	250	425	24.5	370	31	12	295	-	250	44	241	137	270	180	81
	300	270	485	27.5	430	31	16	343	-	300	69	301	175	311	200	151
	350	290	555	30	490	34	16	386	-	350	94	352	205	357	225	167
	400	310	620	32	550	37	16	425	-	400	115	394	234	395	250	201
	450	330	670	34.5	600	37	20	454	-	450	142	457	267	435	275	231
	500	350	730	36.5	660	37	20	490	-	500	165	500	293	474	300	266
	600	390	845	42	770	41	20	554	-	600	215	590	346	550	330	457
	700	430	960	46.5	875	44	24	616	2.5	700	261	695	405	630	390	623
	800	470	1085	51	990	50	24	714	13	800	312	763	427	716	450	855
	900	510	1185	55.5	1090	50	28	775	25	800	364	785	405	787	550	1140
	1000	550	1320	60	1210	57	28	827	34	800	406	800	390	870	600	1410
	1200	630	1530	69	1420	57	32	959	37	1000	506	987	487	1025	685	2052
	1400	710	1755	74	1640	62	36	1129	51.5	1200	605	1179	589	1185	800	3030
	1500	750	1865	77.5	1750	62	36	1269	66.5	1200	646	1205	593	1248	780	3580
	1600	790	1975	81	1860	62	40	1326	79	1200	695	1222	573	1322	820	4249
	1800	870	2195	88	2070	70	44	1470	111	1250	810	1304	564	1477	1000	5658

Dimensions for working pressure 40 bars and higher as per request

Installation of Tilting-Disc Check Valves with Counter Weight

Horizontal pipeline:

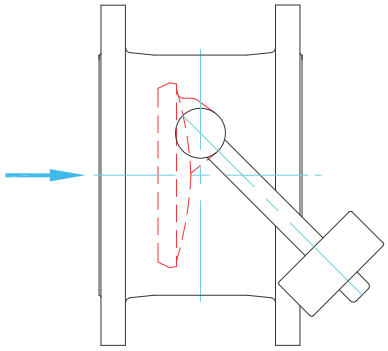

Pos. 1
Counter weight and lever on the right hand side of the valve in flow direction

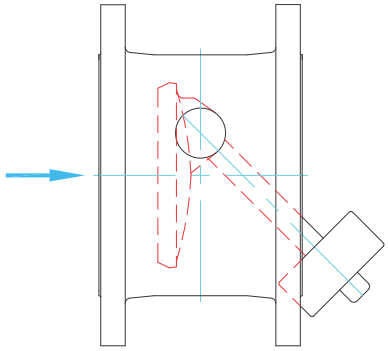

Pos. 2
Counter weight and lever on the left hand side of the valve in flow direction.

Vertical pipeline with flow direction upward:

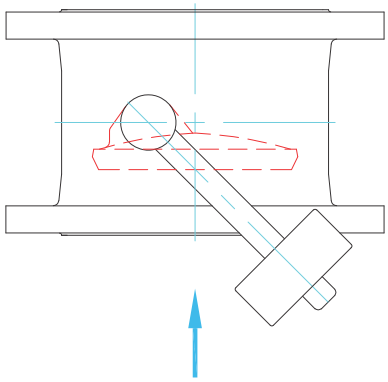

Pos. 3

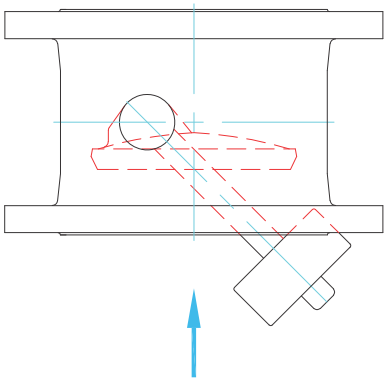

Pos. 4

Vertical pipeline with flow direction downward:

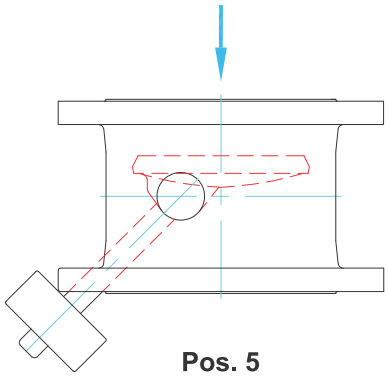

Pos. 5

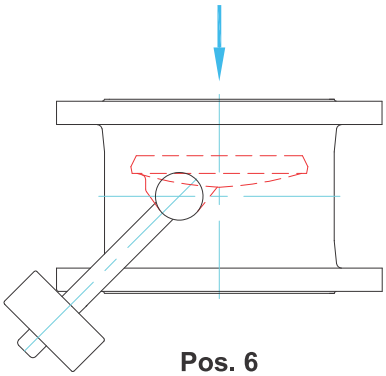

Pos. 6

Note:
Normally the lever and counter weight of all non-return valves with counter weight are assembled as shown in Pos.2. (Horizontal line) For other valve positions, the lever should be assembled according to the valve positions as shown in the above figures.

Conditions for installation of flanged type Butterfly valve next to Tilting-Disc Check Valve with Counter Weight and Lever

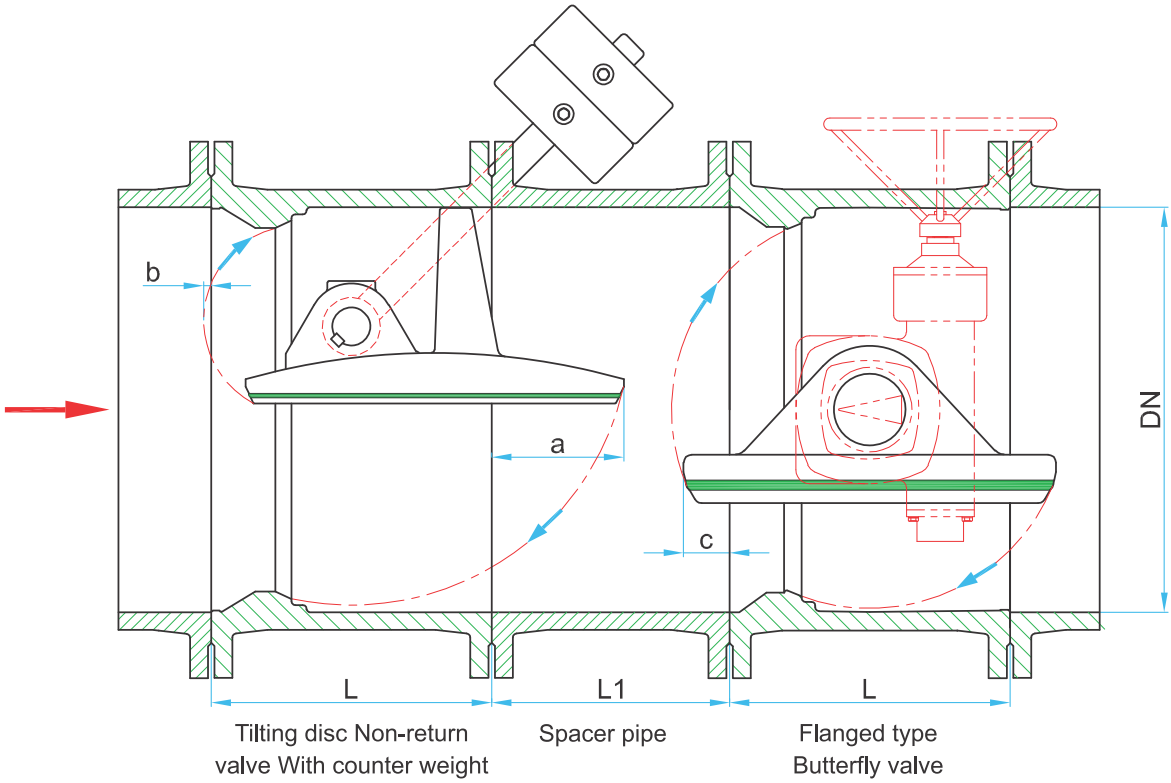

For installation of non-return valve adjacent to a butterfly valve, the weight lever of the Tilting-Disc Check Valve must be on the left hand side in flow direction and the gearbox of the butterfly valve on the right hand side to prevent collision of the weight lever with the gearbox of the butterfly valve.

DN	L mm	L1 mm	a mm	b mm	c mm
100	190	—	—	—	—
150	210	—	—	—	—
200	230	150	23	—	—
250	250	150	44	—	—
300	270	150	69	—	2
350	290	200	94	—	25
400	310	225	115	—	40
450	330	280	143	—	58
500	350	300	165	—	65
600	390	400	225	—	95
700	430	500	272	25	120
800	470	600	315	13	150
900	510	650	380	25	180
1000	550	750	423	34	210
1200	630	900	515	62	280
1400	710	1100	615	80	340
1600	790	1300	705	90	455
1800	870	1400	815	110	455

Tilting-Disc Check Valves with Hydraulic Damping System

Mirab Tilting-Disc check valves with counter weight can be equipped with hydraulic damping system for adjusting the closing time. With the damping system the opening and closing time can be reduced, and the water hammer effect can be prevented by reducing the damping time.
Application: To provide non-slam performance in places where water return through the valve is permitted. A flow control valve can adjust the opening and closing speed of check valve disc.

Application examples:

- **Water supply line with pumps installed in parallel**
  When the pump is turned off and the flow direction reversed, the valve closes, and if the valve does not have a damping mechanism, the resultant force could damage the system. In this case, the reverse pressure would be equal to the pump pressure.

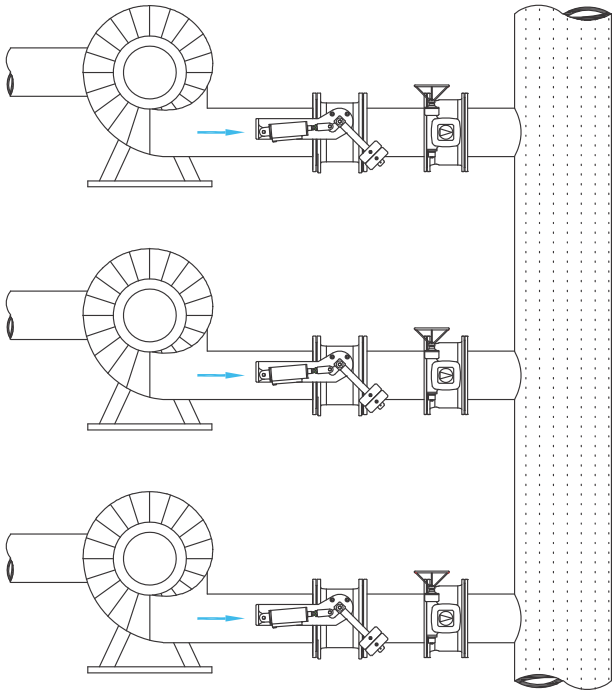

- **Water supply line with long pipe and high elevation**
  Pumping to high elevation.
  Quick change in flow direction which results in extensive force. In this situation the amount of reverse pressure on the closed disk is caused by the amount of water column.

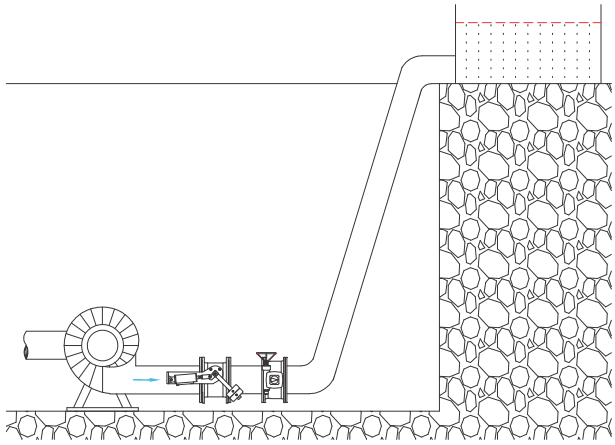

Selection of Tilting-Disc Check Valves with Hydraulic Damping System

Order for Tilting-Disc check valve with damping device should contain back (or differential) pressure.

If the standard types are equipped with hydraulic damping device on one side, due to shaft dimensioning and material, the maximum admissible back pressure is limited according to the table below:

DN [mm]	150	200	250	300	350	400	450	500	600	700	800	900	1000	1200	1400 to 1800
Maximum admissible back pressure [bar]	12.5	14.5	7.1	8.5	5.4	3.6	4.6	3.3	3.2	3.1	2.9	2.9	2.9	2.6	2

If the Tilting-Disc Check Valve is equipped with damping device on both sides, the maximum admissible back pressure will be doubled in the above table.

Types for higher back pressure upon request.

Illustration of tilting disc with counter weight of DN 400 and PN 10 installed in horizontal position.
Due to geometrical similarity, this graph could also be used for other valve sizes.

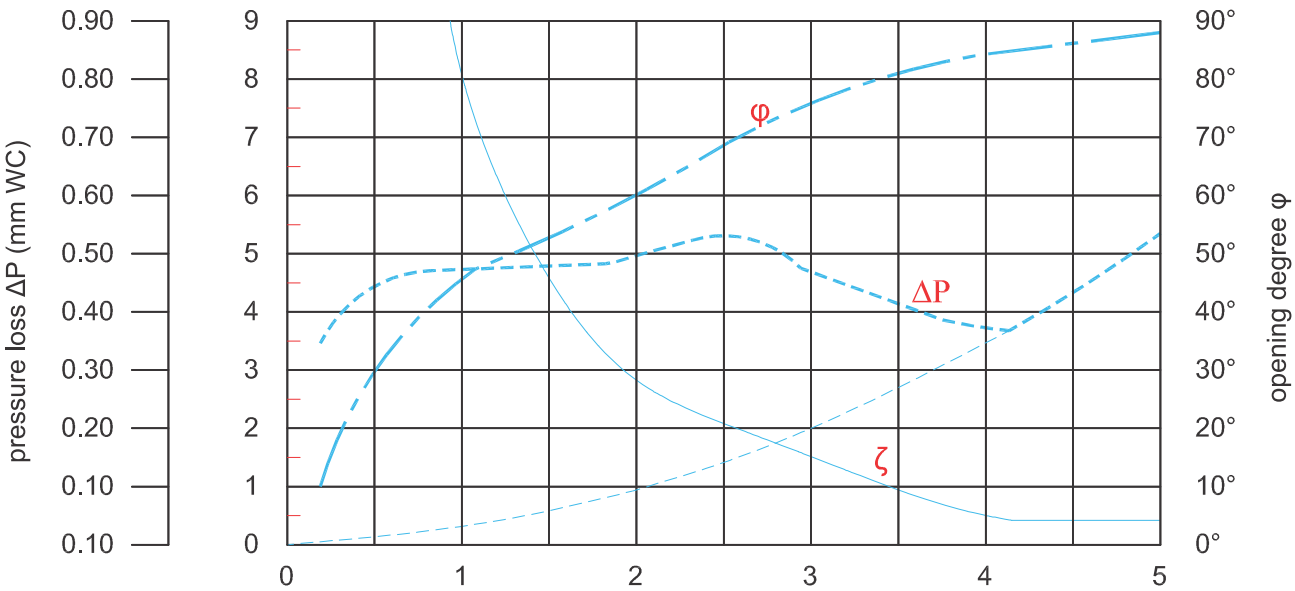

--- Pressure loss when the valve is fully open

Tilting-Disc Check Valves with Hydraulic Damping System Type 1

This design of Tilting-Disc check valve with damping system produce in Mirab valve as routine product.this valve's function is very smooth & easy. Damping system works while closing & The closing time is adjustable by move the weights on lever, also the cylinder orifice is exchangeable.

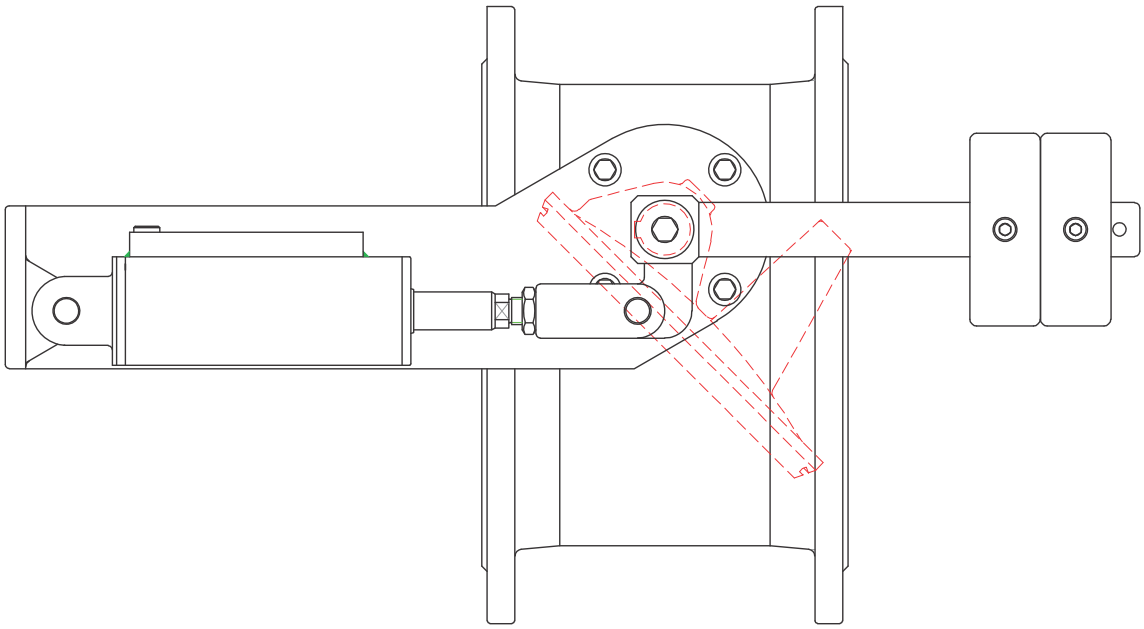

Damping system installation on body, Type 1

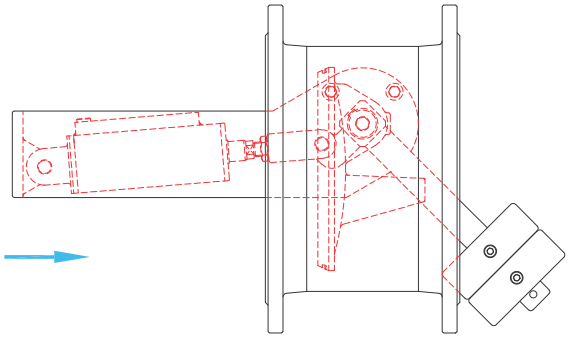

Pos. 1
The damping system & the weight are located on left side of flow

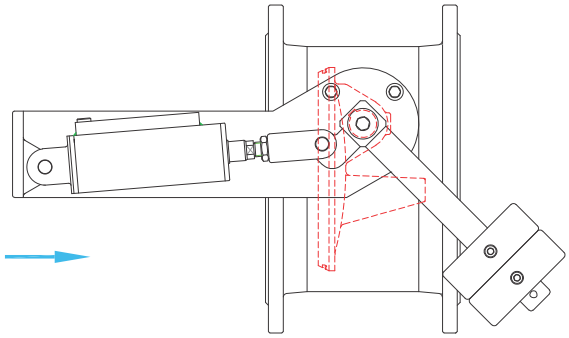

Pos. 2
The damping system & the weight are located on right side of flow

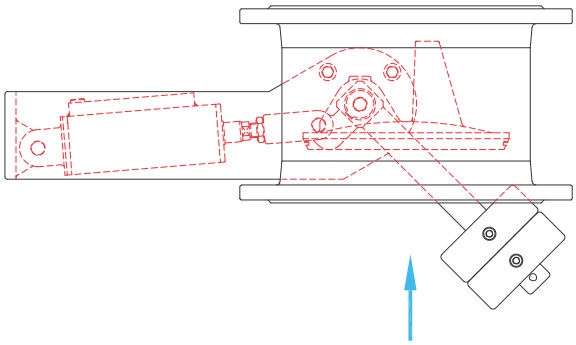

Pos. 3
The damping system & the weight are located on left side of flow

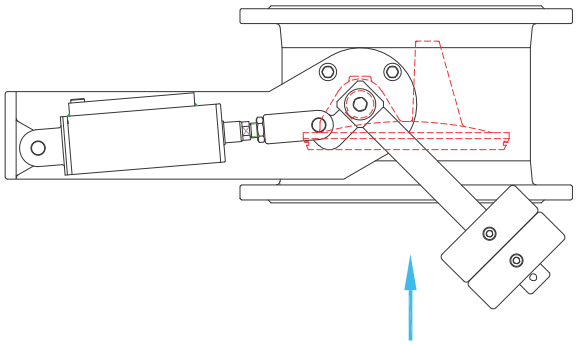

Pos. 4
The damping system & the weight are located on right side of flow

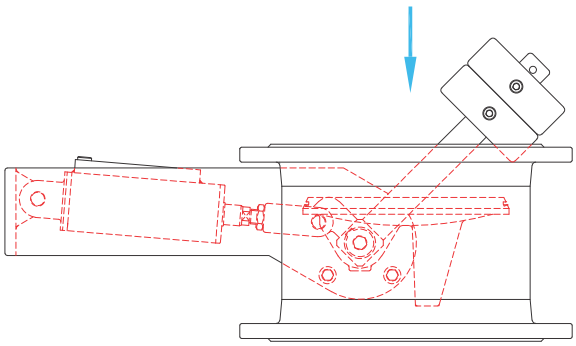

Pos. 5
The damping system & the weight are located on left side of flow

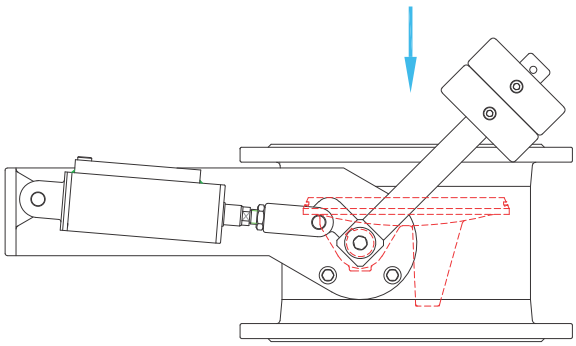

Pos. 6
The damping system & the weight are located on right side of flow

Mechanism and operation of Tilting-disc Check Valve with Damping Cylinder, Type 2

This type of Tilting-Disc check valve with damping system are manufactured based on request. Damping system works in this type in open or close position. Damping system is equipped with hydraulic flow control valve which can adjust the close or open time of easily.

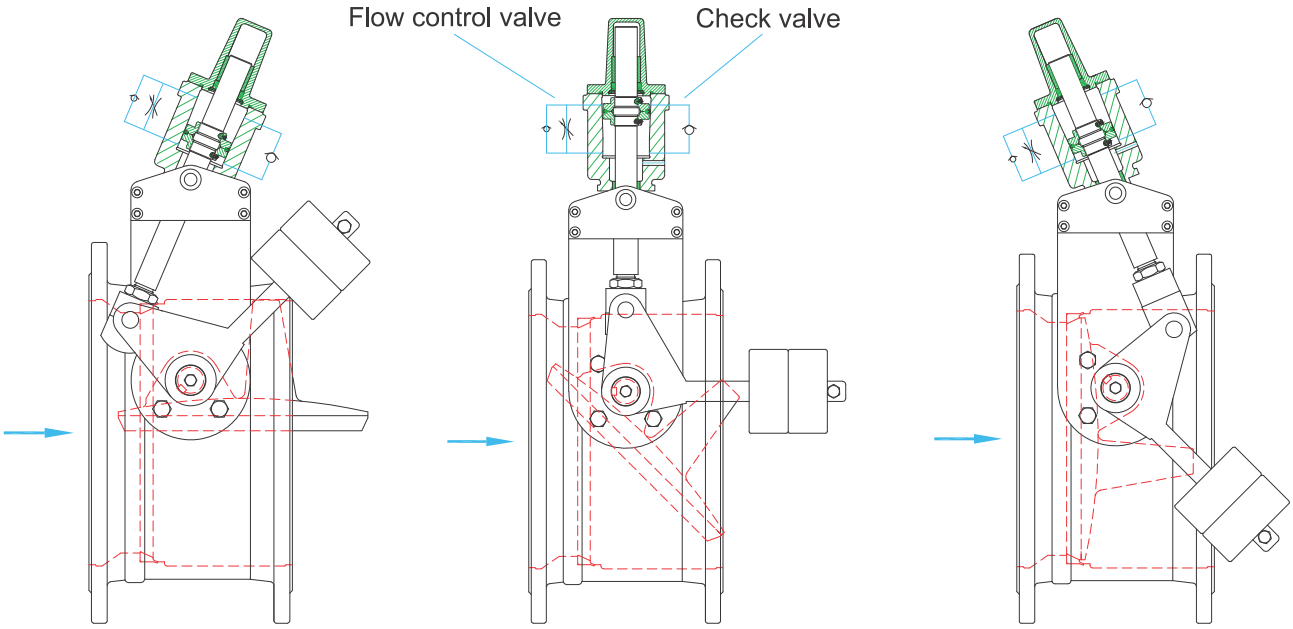

Tilting-Disc Check valve in damped open position

Tilting-Disc Check valve in 50% open position

Tilting-Disc Check valve in damped closed position

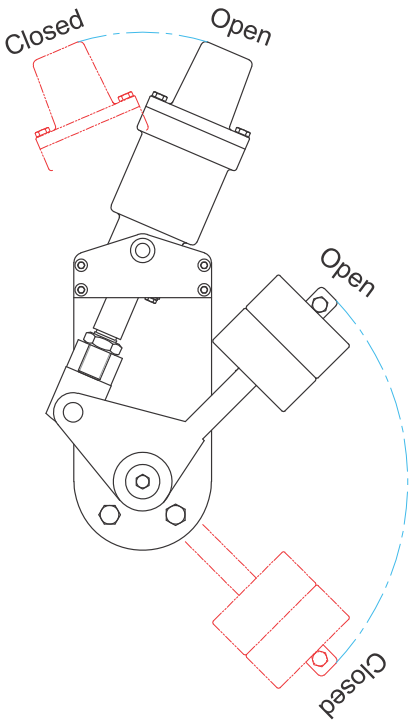

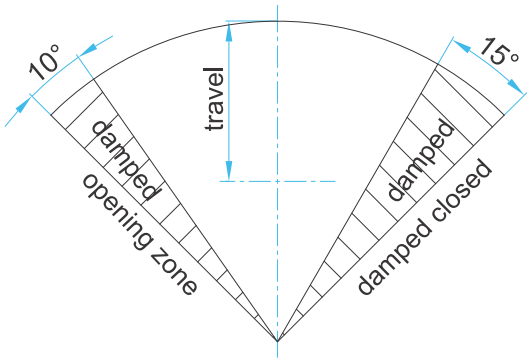

Closing time can be adjusted to 30-seconds max. as standard, by a flow control valve.

Positions of Hydraulic Cylinder on Tilting-Disc Check Valve, Type 2

Horizontal pipeline:

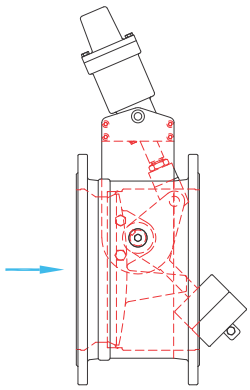

Pos. 1
Weight and damping on the left side of the valve in flow direction

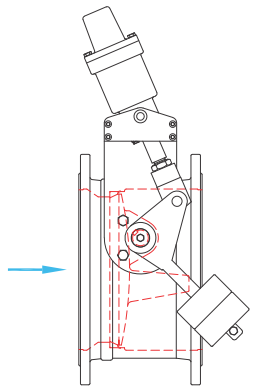

Pos. 2
Weight and damping on the right side of the valve in flow direction

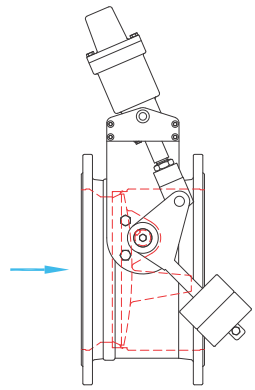

Pos. 3
Weight and damping on both sides of the valve

Vertical pipeline with flow direction upward

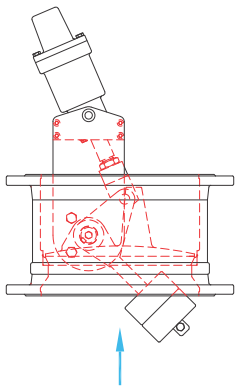

Pos. 4
Weight and damping on the left side of the valve in flow direction

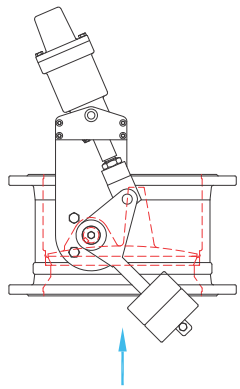

Pos.5
Weight and damping on the right side of the valve in flow direction

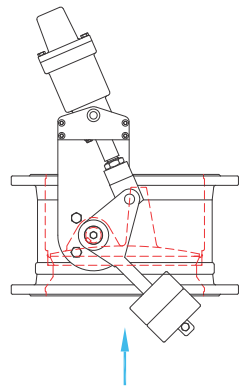

Pos. 6
Weight and damping on both side of the valve

Vertical pipeline with flow direction downward:

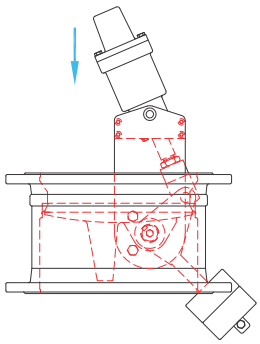

Pos. 7
Weight and damping on the left side of the valve in flow direction

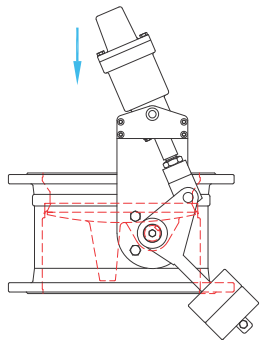

Pos.8
Weight and damping on the right side of the valve in flow direction

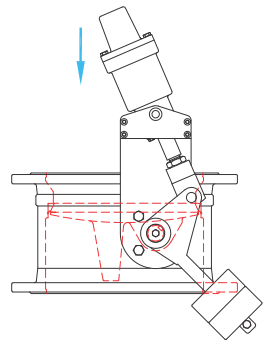

Pos. 9
Weight and damping on both sides of the valve

Please indicate position of damping system in your order.
Note: Normally ,Mirab products are made according to the horizontal lines.

Damping time adjustment

The valve opening and closing speed can be adjusted by damping time at the flow control valve

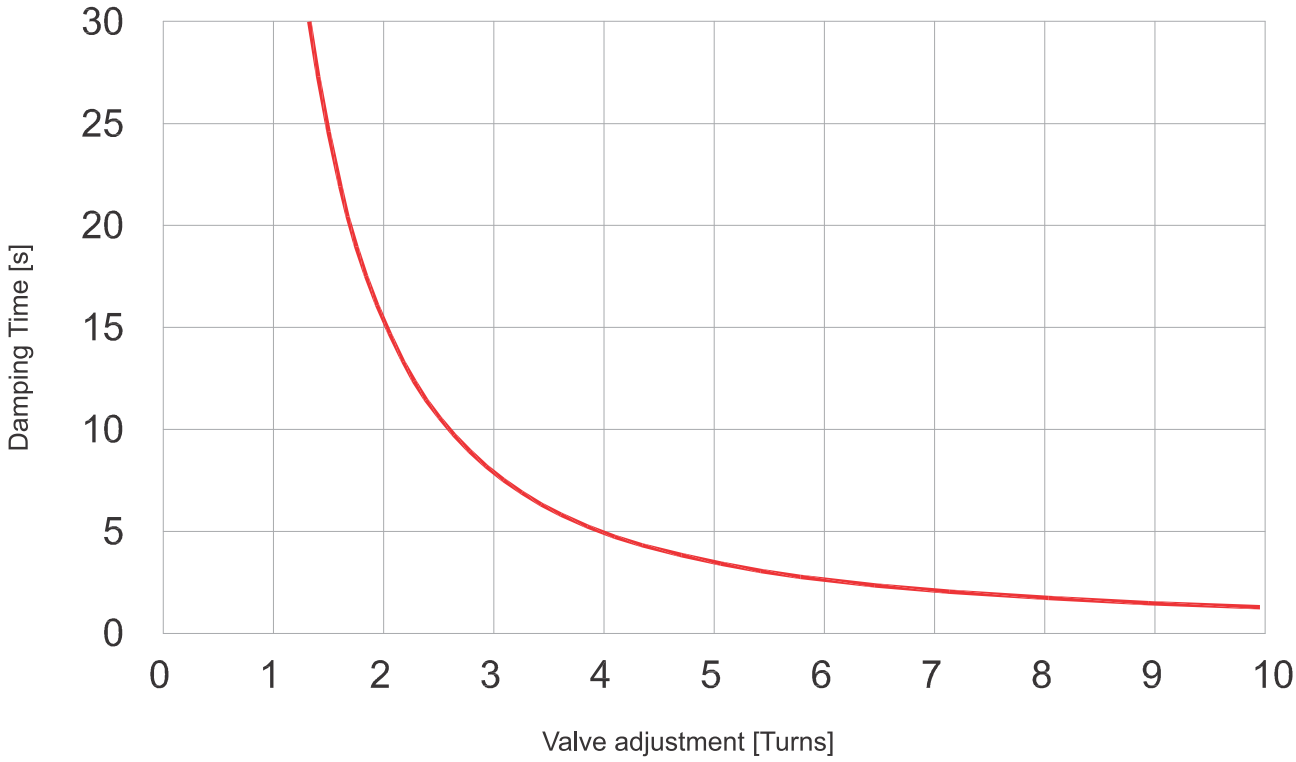

If the Tilting-Disc Check Valve is equipped with mounted oleo hydraulic damping device on both sides, the flow control valve of both oleo hydraulic damping devices must be adjusted at the same time.

Mirab can change the dimensions without any notice.
We are not responsible for any error in printing.

MIRAB Co' PRODUCTS

Butterfly Valves Family: Double Flanged Type, Butt-weld End, Wafer Type, Lug Type, Hydraulic Actuated, Pneumatic Actuated.
Gate Valves Family: Soft-Sealing Gate Valve, Metal Seat Gate Valve, Knife Gate Valve, Sluice Gate Valve.
Non Return Valves Family: Tilting Disc with Counter Weight, Tilting Disk with Counter Weight and Hydraulic Damper, Swing Check Valve, Silent Check Valve, Foot Valve, Nozzle Check Valve, Wafer Pattern Check Valve, FlapValve.
Air Vent Family: Single Chamber - Double Orifices , Double Chambers - Double Orifices, Sewage Air Valves, Large - Orifice Air Valve.
Control Valves Family: Automatic Control Valves, Needle Valve, Globe Valve, Fixed Cone Free Discharge Valve, Hollow Jet Valve, Sleeve Valve.
Hydrant Valves Family: Standing Type, Pit Type, Wet Barrel Fire Fighting Valve, Post Indicator Valve.
Strainers Family: Y Type, T Type, One Side Flanged Type.
Fittings Family: Dismantling Joint F1&F2, Pipe Coupling, Flange.
Actuators: Electrical, Hydraulic, Penumatic, Portable Electrical.

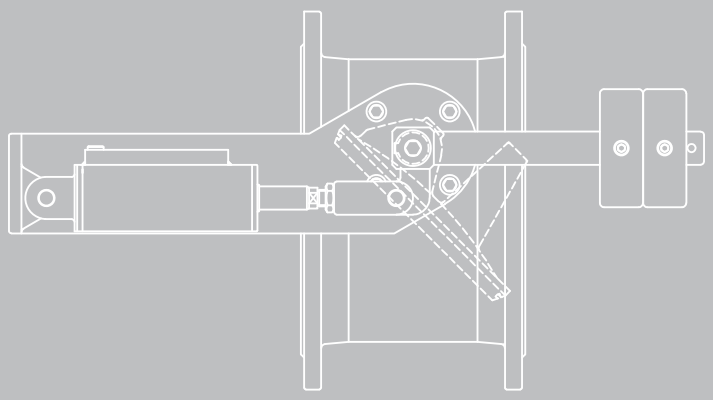

MIRAB CO.®

Head office: #9, 14th Alley,
N. Gol Afshan St., Dadman Blvd.,
Shahrak-e-Qods,
Tehran, 14697-85171, Iran
Tel: +98 (0)21 88372220
Fax: +98 (0)21 88577508

Plant #1: 28th St.,
Km 10 of Karaj Special Rd.,
Tehran, 13897-15851,
Iran
Tel: +98 (0)21 44545650
Fax: +98 (0)21 44545658

Plant #2: Sarvestan Blvd.,
Shams-Abad Industrial zone,
Km 40 of Tehran-Qom Highway,
Tehran, 18341-86581,
Iran
Tel: +98 (0)21 44545656

P.O.Box: 18335-365

info@mirab-valves.com